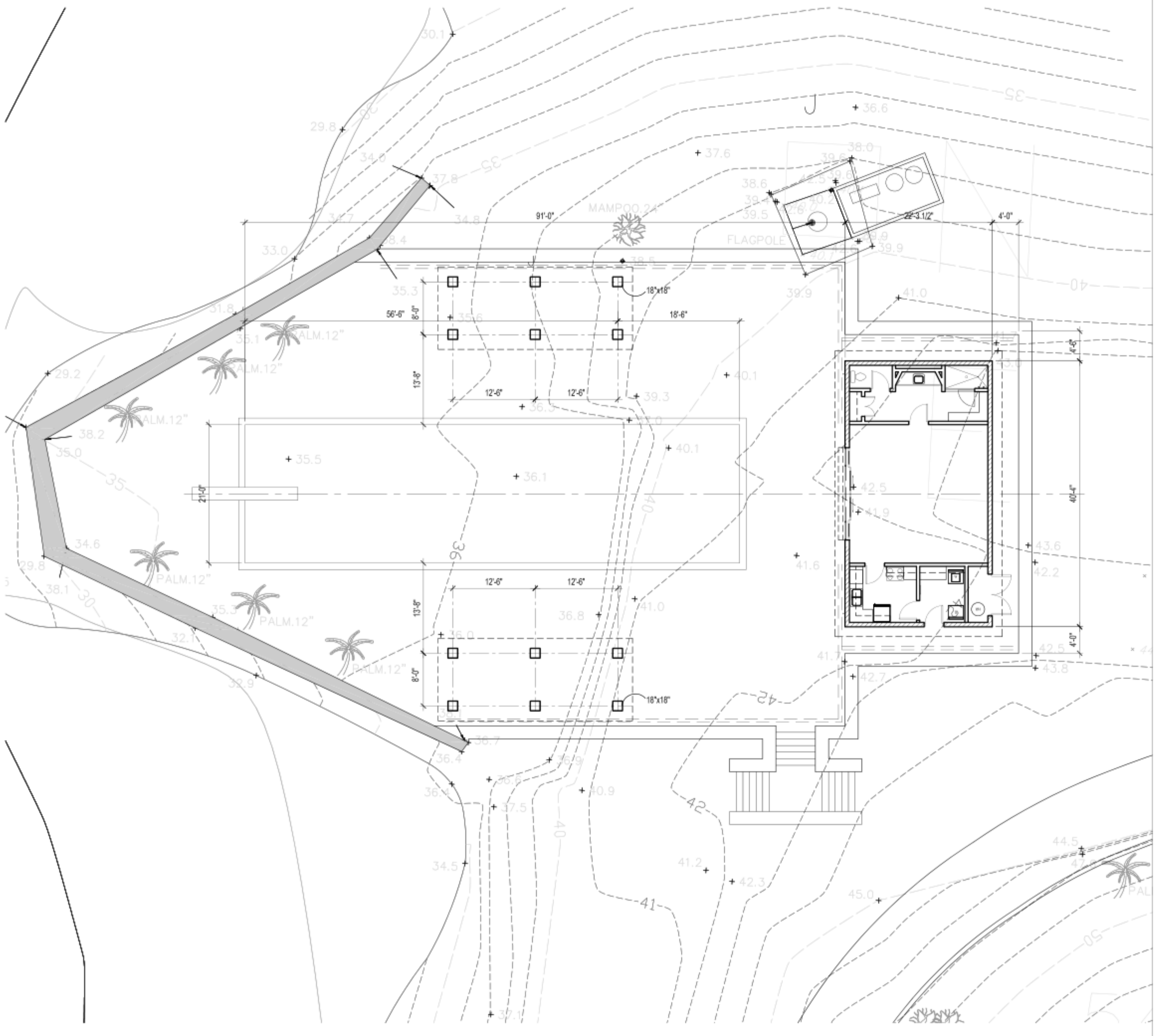

SITE PLAN

KEY NOTES

SHEET NOTES

Little St. James Island
St. Thomas, USVI

Flagpole Pool

Gensler
2500 Broadway
Suite 300
Santa Monica **CA 90404**
Telephone 310.449.5600
Facsimile 310.449.5852

Issue	Date & Issue Description	By	Check
	4/4/11 DESIGN DEVELOPMENT		

Seal/Signature

Project Name
Little St. James Island – Flagpole Pool

Project Number
05.7112.008

CAD File Name

Description

Scale

A02.01

© 2004 Gensler

EFTA01069634

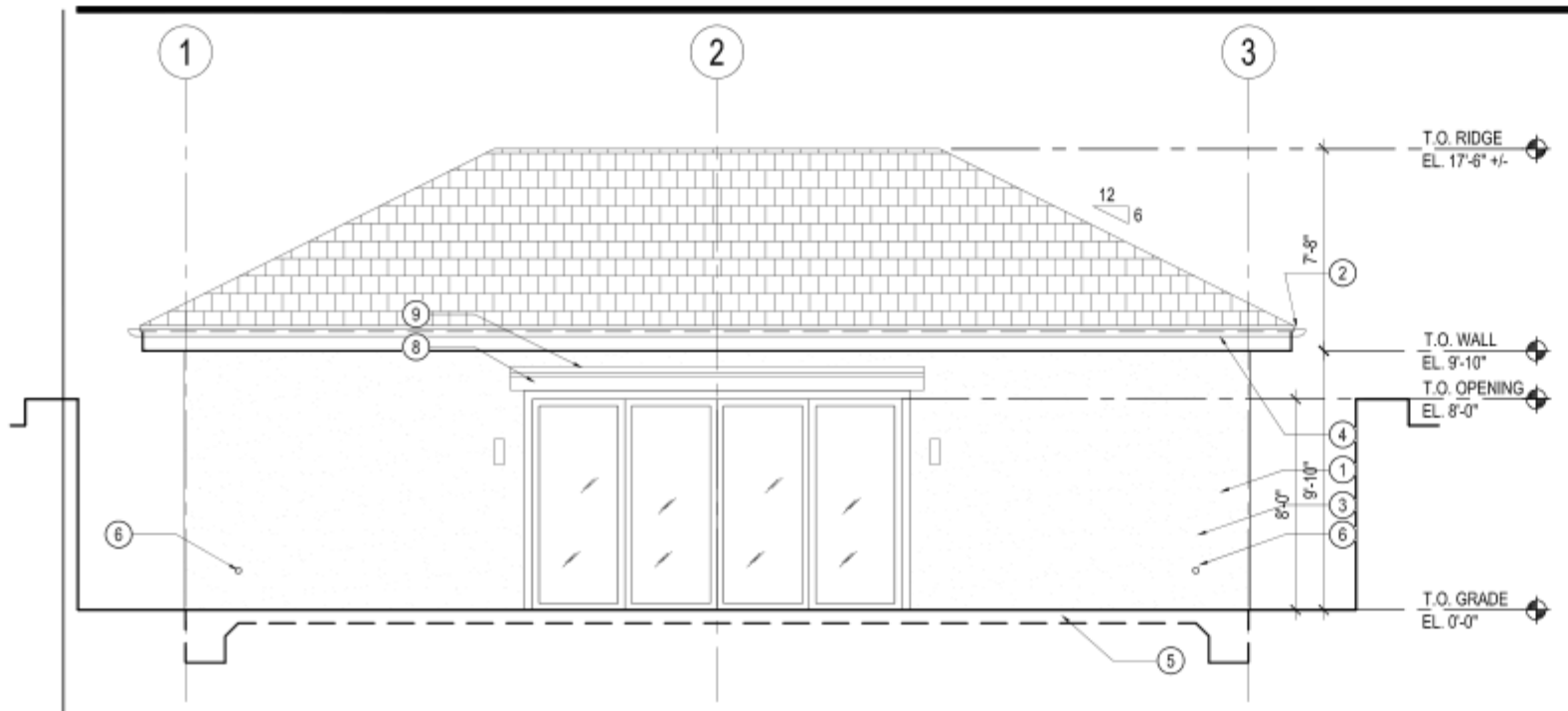

EXTERIOR ELEVATIONS - POOL HOUSE (WEST) 4

SCALE: $\frac{1}{4}$" = 1'-0"

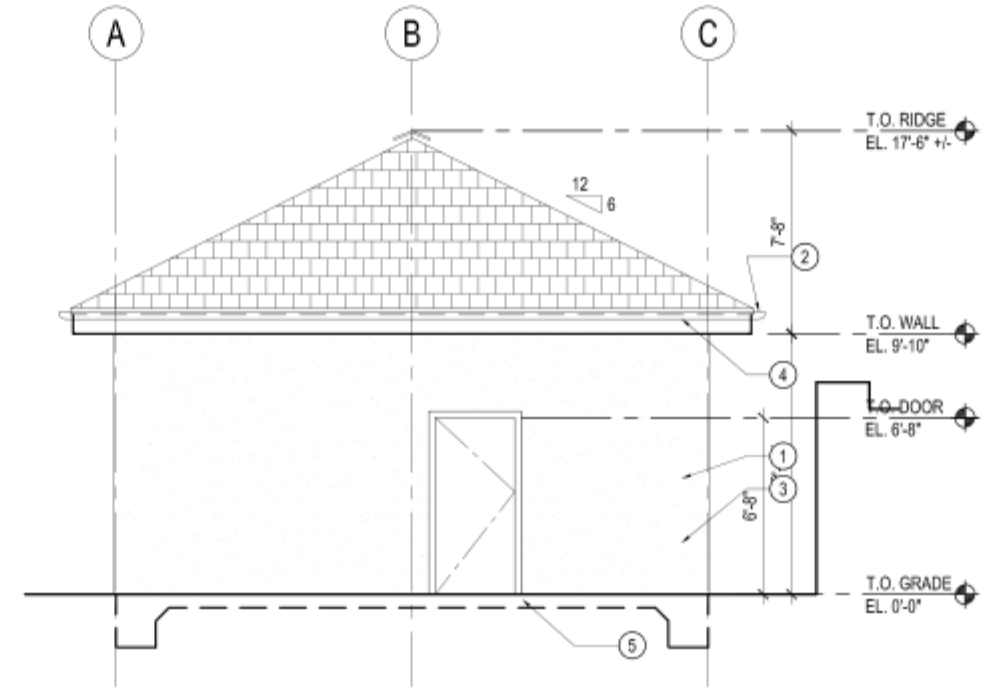

EXTERIOR ELEVATIONS - POOL HOUSE (SOUTH) 1

SCALE: $\frac{1}{4}$" = 1'-0"

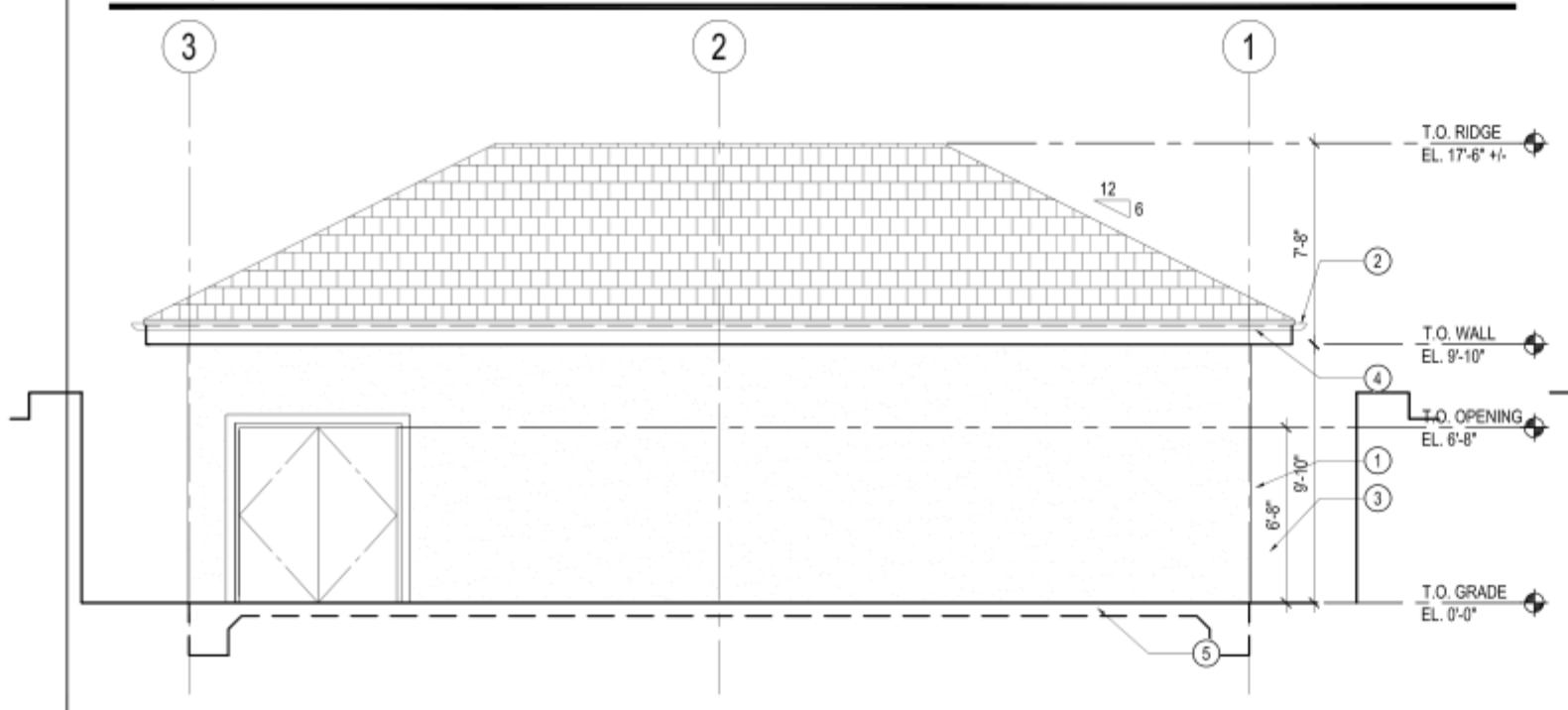

EXTERIOR ELEVATIONS - POOL HOUSE (EAST) 5

SCALE: $\frac{1}{4}$" = 1'-0"

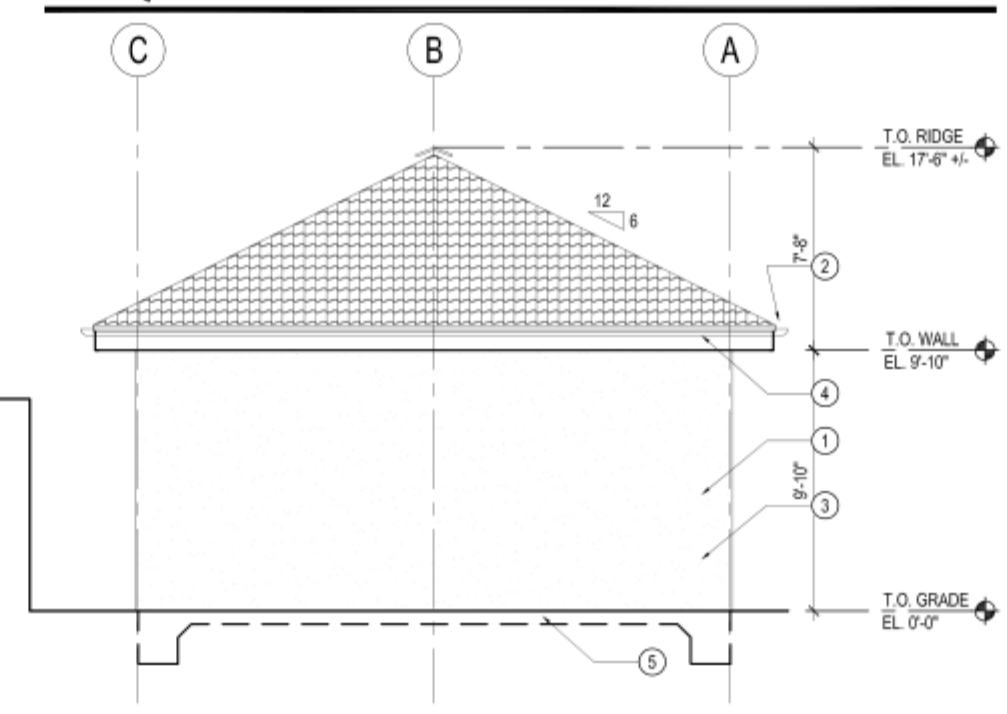

EXTERIOR ELEVATIONS - POOL HOUSE (NORTH) 2

SCALE: $\frac{1}{4}$" = 1'-0"

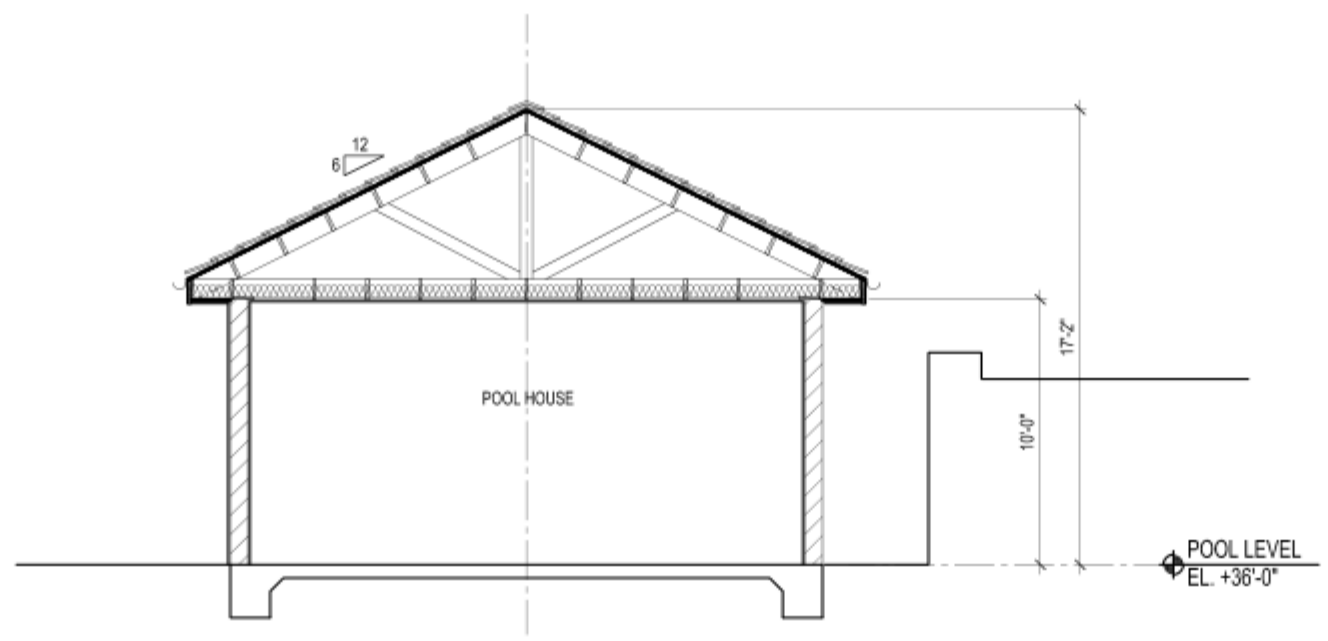

BUILDING SECTION - POOL HOUSE 3

SCALE: $\frac{1}{4}$" = 1'-0"

KEY NOTES

1. INTEGRAL COLORED PLASTER OVER CONCRETE
2. DRAINAGE
3. STONE BASE
4. FASCIA BOARD
5. FOUNDATION BELOW GRADE
6. HOSE BIB
7. FLAT GLAZED BLUE CONCRETE TILE
8. ROLL-OUT HURRICANE SHUTTER
9. MECHANICAL AWNING
10. LIGHT FIXTURE

SHEET NOTES

Little St. James Island
St. Thomas, USVI

Flagpole Pool

Gensler
2500 Broadway
Suite 300
Santa Monica CA 90404
Telephone 310.449.5600
Facsimile 310.449.5852

Issue	Date & Issue Description	By	Check

Seal/Signature

Project Name
Little St. James Island – Flagpole Pool

Project Number
05.7112.008

CAD File Name

Description

Scale

A03.01

©2004 Gensler

EFTA01069635

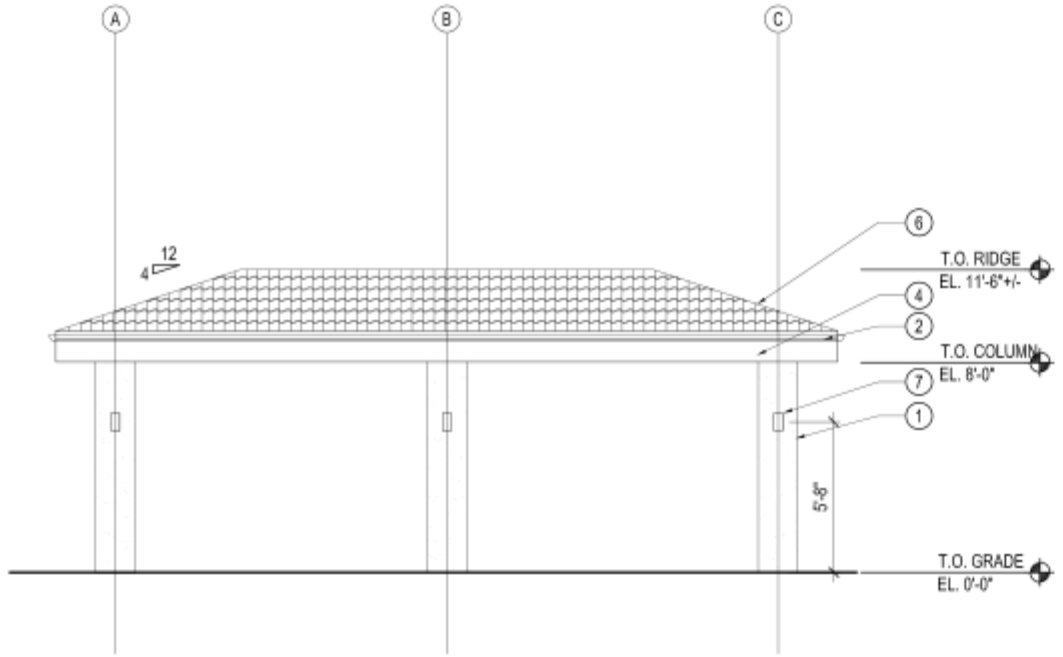

EXT. ELEVATION - (NORTH/SOUTH) OPT.1 — 6

SCALE: $\frac{1}{4}$" = 1'-0"

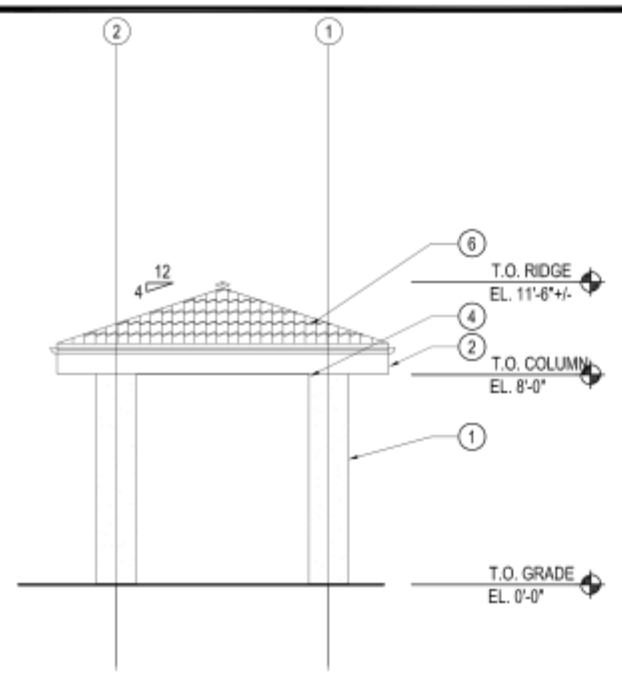

EXT. ELEVATION - (WEST/EAST) - OPT. 1 — 5

SCALE: $\frac{1}{4}$" = 1'-0"

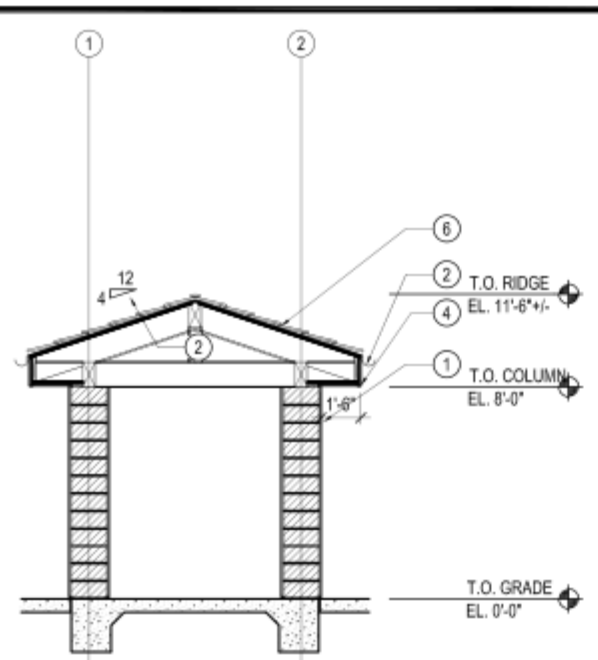

BUILDING SECTION - OPT. 1 — 4

SCALE: $\frac{1}{4}$" = 1'-0"

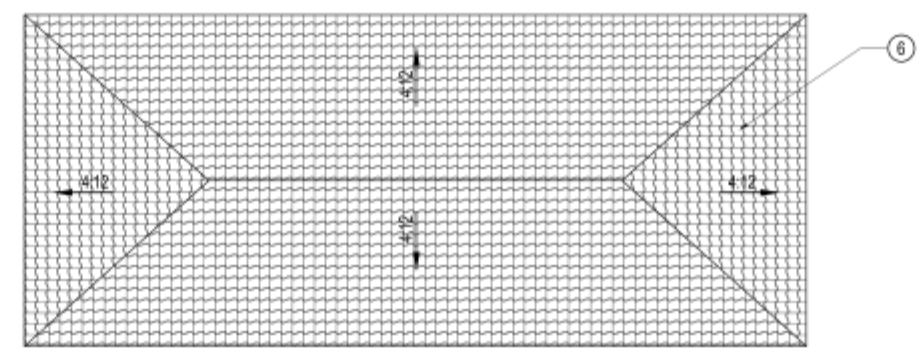

ROOF PLAN - OPT. 1 — 3

SCALE: $\frac{1}{4}$" = 1'-0"

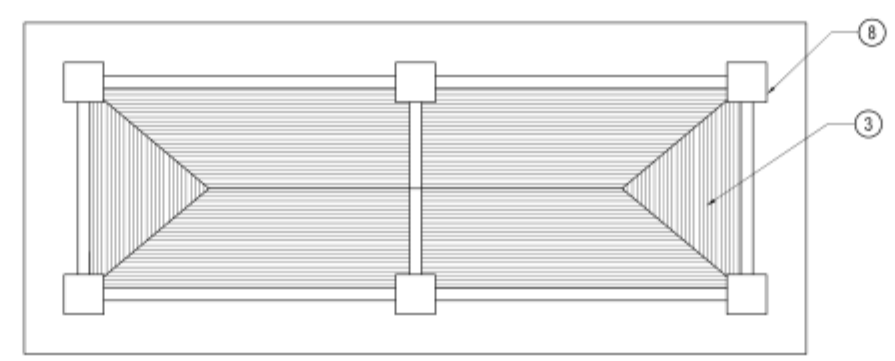

REFLECTED CEILING PLAN - OPT. 1 — 2

SCALE: $\frac{1}{4}$" = 1'-0"

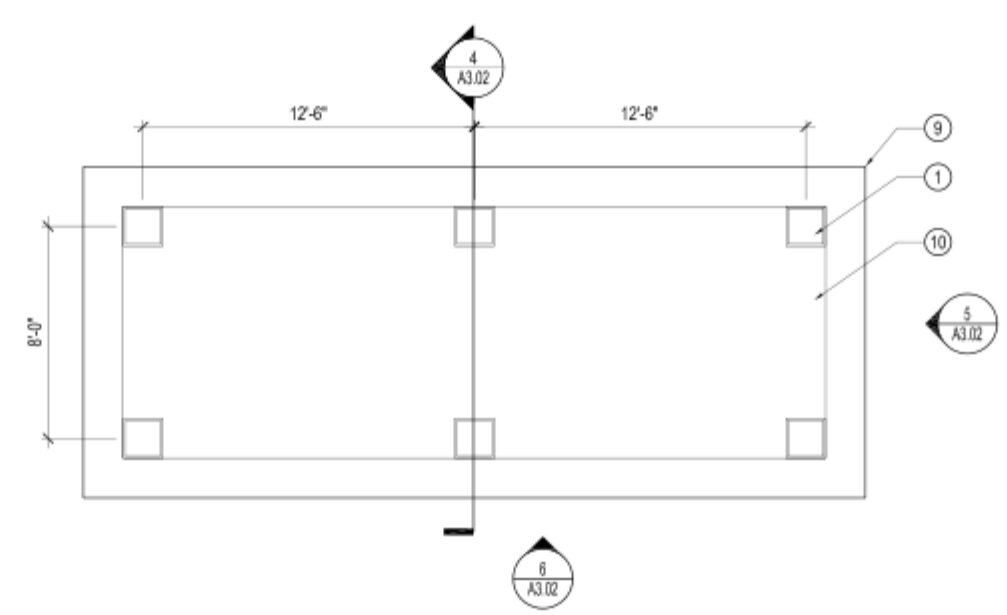

FLOOR PLAN - OPT. 1 — 1

SCALE: $\frac{1}{4}$" = 1'-0"

KEY NOTES

1. INTEGRAL COLORED PLASTER OVER CMU
2. DRAINAGE
3. 2X12 TONGUE AND GROOVE
4. FASCIA BOARD
5. FOUNDATION BELOW GRADE
6. FLAT GLAZED CREAM CONCRETE TILE
7. LIGHT FIXTURE
8. 18"x18" COLUMNS
9. ROOF ABOVE
10. CORAL STONE PAVING PATTERN

SHEET NOTES

Little St. James Island
St. Thomas, USVI

Flagpole Pool

Gensler
2500 Broadway
Suite 300
Santa Monica **CA 90404**
Telephone 310.449.5600
Facsimile 310.449.5852

Issue	Date & Issue Description	By	Check

Seal/Signature

Project Name
Little St. James Island – Flagpole Pool

Project Number
05.7112.008

CAD File Name A03.02 OPT1.dwg

Description SHADE STRUCTURE - OPTION 1

Scale

A03.02

© 2004 Gensler

EFTA01069636

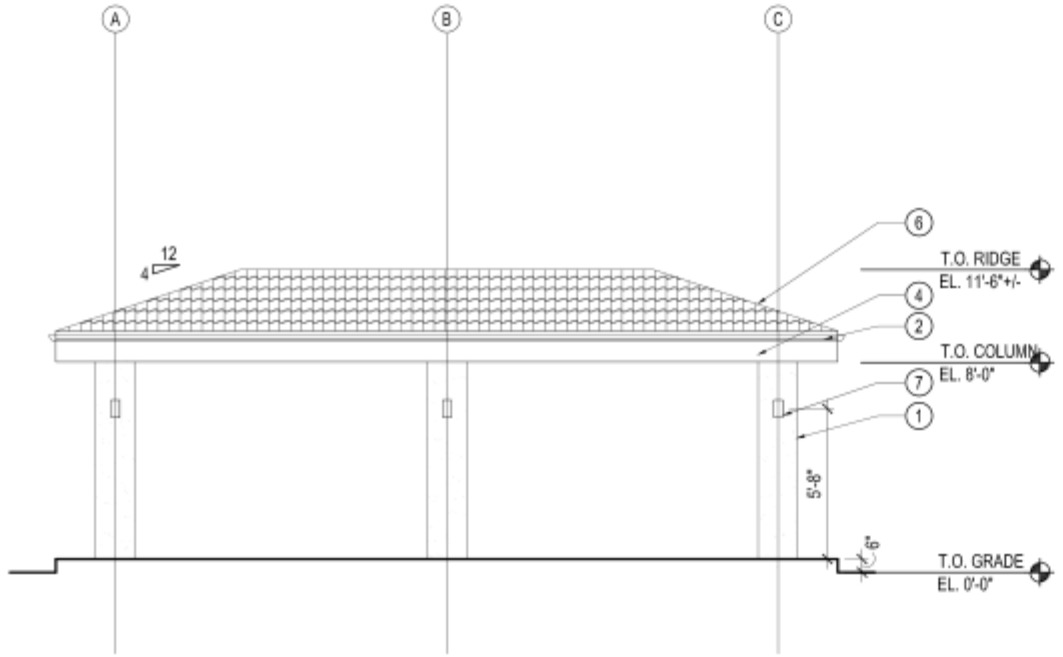

EXT. ELEVATION - OPT.2
SCALE: $\frac{1}{4}$" = 1'-0" 6

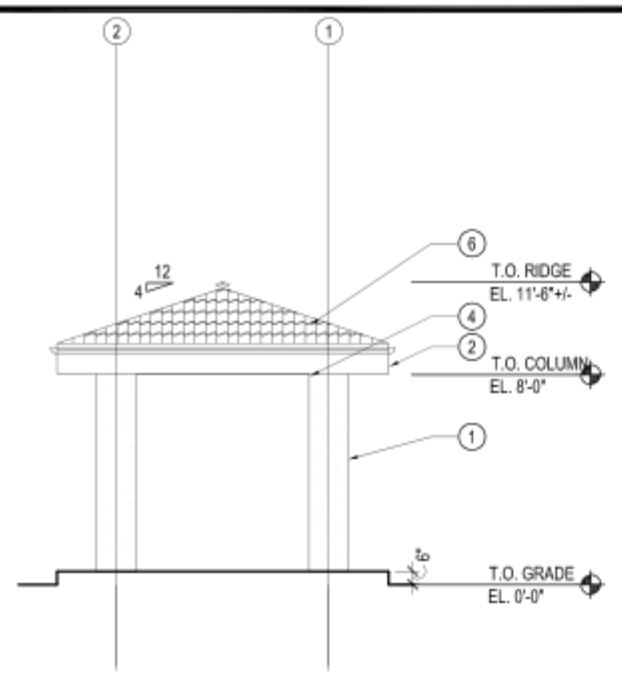

EXT. ELEVATION - OPT. 2
SCALE: $\frac{1}{4}$" = 1'-0" 5

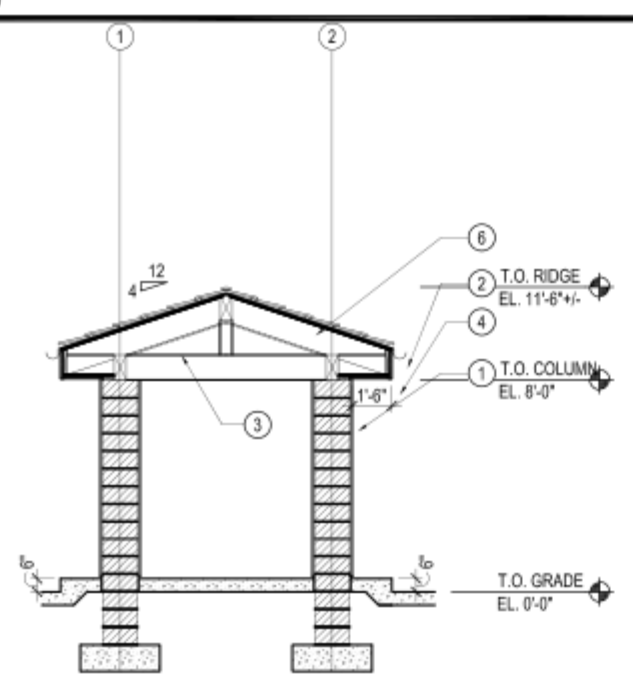

BUILDING SECTION - OPT. 2
SCALE: $\frac{1}{4}$" = 1'-0" 4

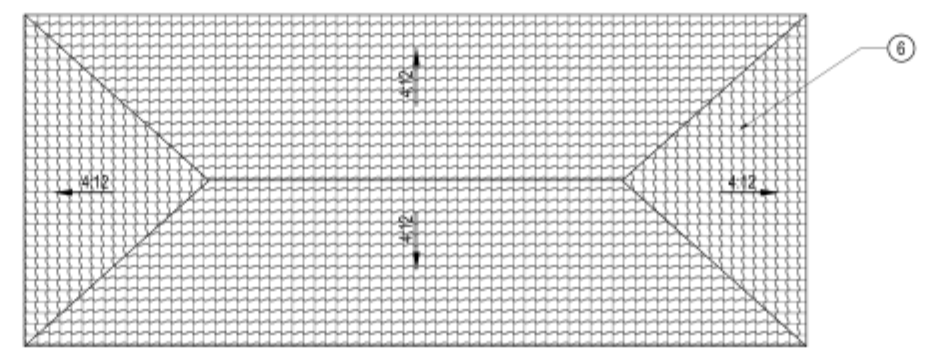

ROOF PLAN - OPT. 2
SCALE: $\frac{1}{4}$" = 1'-0" 3

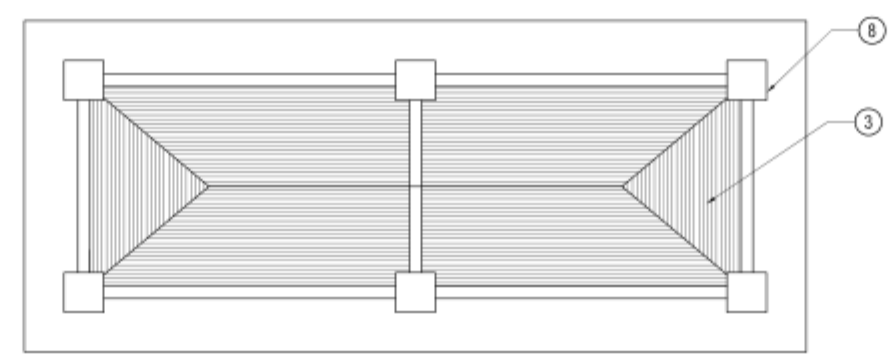

REFLECTED CEILING PLAN - OPT. 2
SCALE: $\frac{1}{4}$" = 1'-0" 2

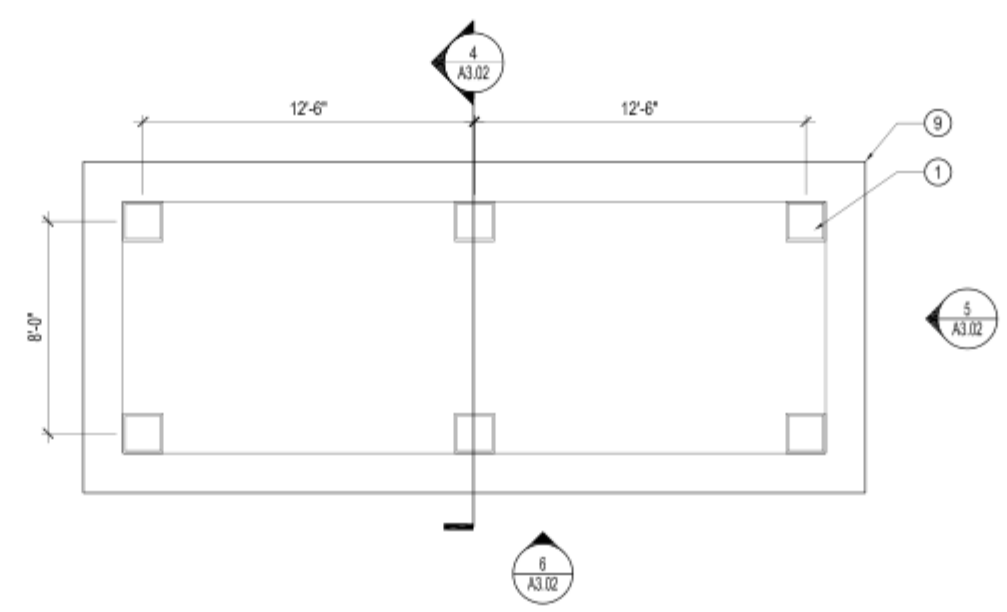

FLOOR PLAN - OPT. 2
SCALE: $\frac{1}{4}$" = 1'-0" 1

KEY NOTES

1. INTEGRAL COLORED PLASTER OVER CMU
2. DRAINAGE
3. 2X12 TONGUE AND GROOVE
4. FASCIA BOARD
5. FOUNDATION BELOW GRADE
6. FLAT GLAZED CREAM CONCRETE TILE
7. LIGHT FIXTURE
8. 18"x18" COLUMNS
9. ROOF ABOVE

SHEET NOTES

Little St. James Island
St. Thomas, USVI

Flagpole Pool

Gensler
2500 Broadway
Suite 300
Santa Monica **CA 90404**
Telephone 310.449.5600
Facsimile 310.449.5852

Issue	Date & Issue Description	By	Check

Seal/Signature

Project Name
Little St. James Island – Flagpole Pool

Project Number
05.7112.008

CAD File Name A03.02 OPT2.dwg

Description SHADE STRUCTURE - OPTION 2

Scale

A03.02

© 2004 Gensler

EFTA01069637

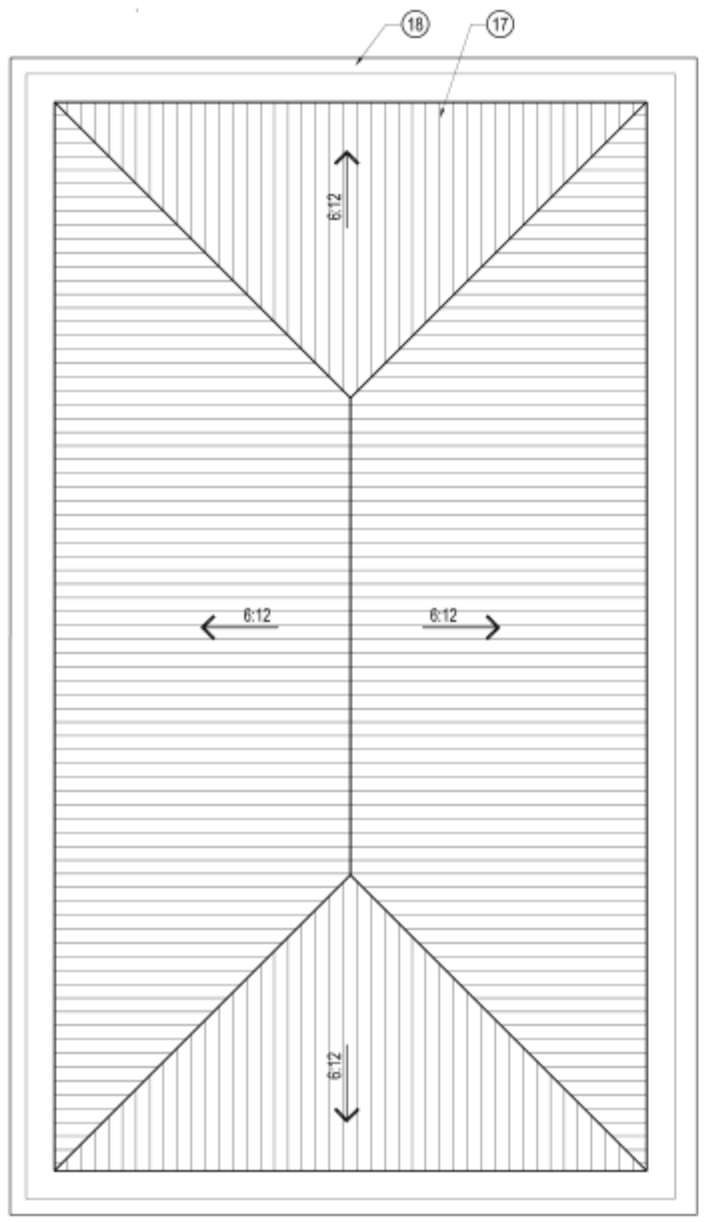

ROOF PLAN

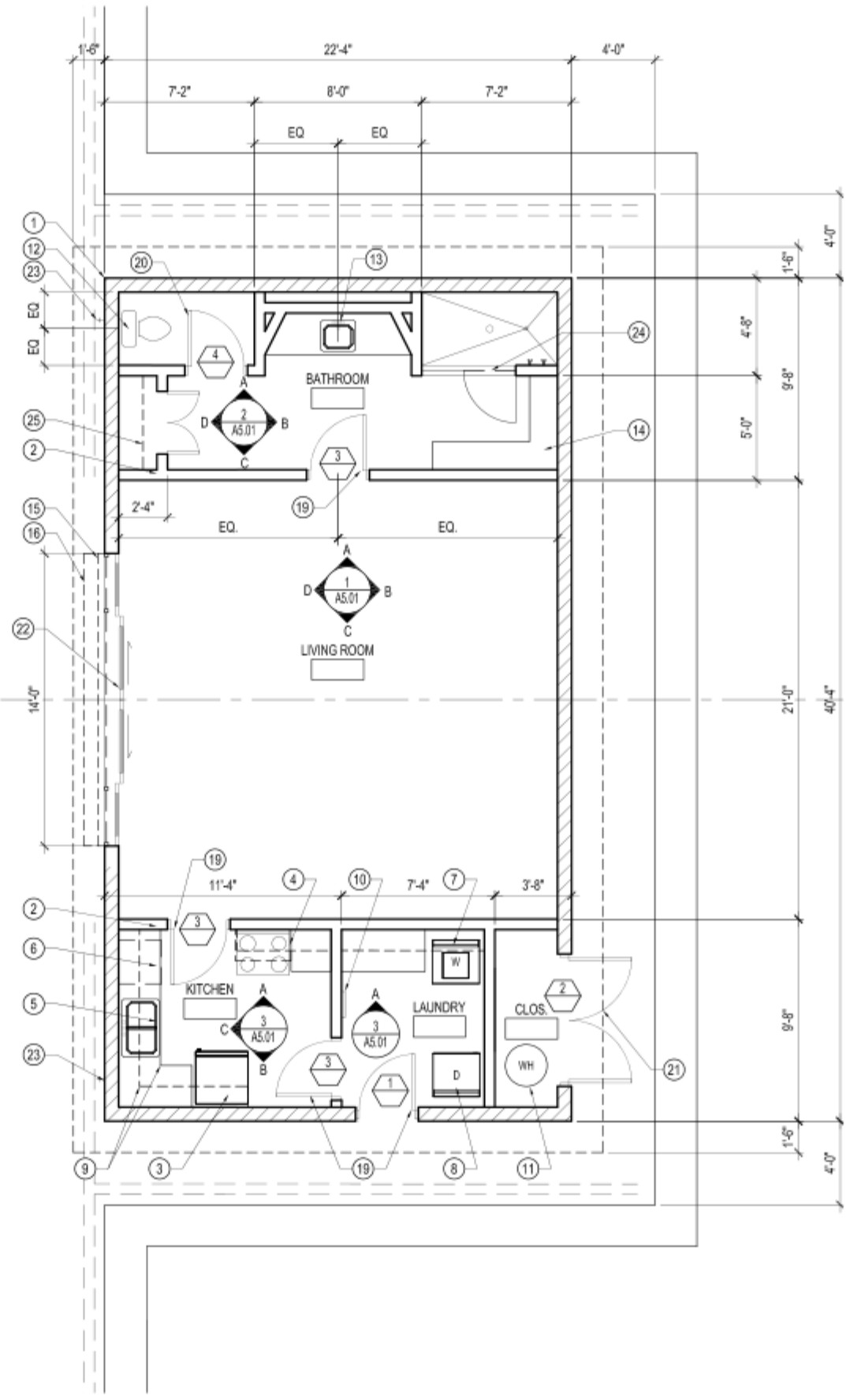

FLOOR PLAN

KEY NOTES

1. 8" CMU, GROUTED, WITH EXTERIOR CEMENT PLASTER FINISH
2. INTERIOR PARTITION. 2X6 PT WOOD FRAMING @ 16" O.C., CEMENT BOARD SHEATING, CEMENT PLASTER FINISH
3. 30" REFRIGERATOR/FREEZER WITH ICE-MAKER
4. 30" RANGE WITH VENT ABOVE
5. DOUBLE SINK WITH DISPOSAL
6. DISHWASHER
7. CLOTHES WASHER
8. DRYER
9. BASE AND UPP ER CABINET
10. ELECTRICAL PANEL
11. WATER HEATER
12. TOILET
13. SINK
14. BUILT-IN BENCH
15. ROLL-DOWN HURRICANE SHUTTER
16. MECHANICAL AWNING
17. CONCRETE TILE ROOF
18. GUTTER SYSTEM WITH DOWNSPOUTS
19. 2'-8" X 6'-8" S.C. WOOD DOOR, PAINTED
20. 2'-6" X 2'-8" S.C. WOOD DOOR, PAINTED
21. 6'-0" X 6'-8" PAIR S.C. WOOD DOORS, PAINTED
22. 14'-0" X 6'-8" ALUMINUM SLIDING GLASS DOORS
23. HOSE BIBB
24. TEMPERED GLASS SHOWER ENCLOSURE
25. BUILT-IN SHELVES

SHEET NOTES

Little St. James Island
St. Thomas, USVI

Flagpole Pool

Gensler
2500 Broadway
Suite 300
Santa Monica **CA 90404**
Telephone 310.449.5600
Facsimile 310.449.5852

Issue	Date & Issue Description	By	Check
	4/4/11 DESIGN DEVELOPMENT		

Seal/Signature

Project Name
Little St. James Island – Flagpole Pool

Project Number
05.7112.008

CAD File Name

Description

Scale

A04.01

© 2004 Gensler

EFTA01069638

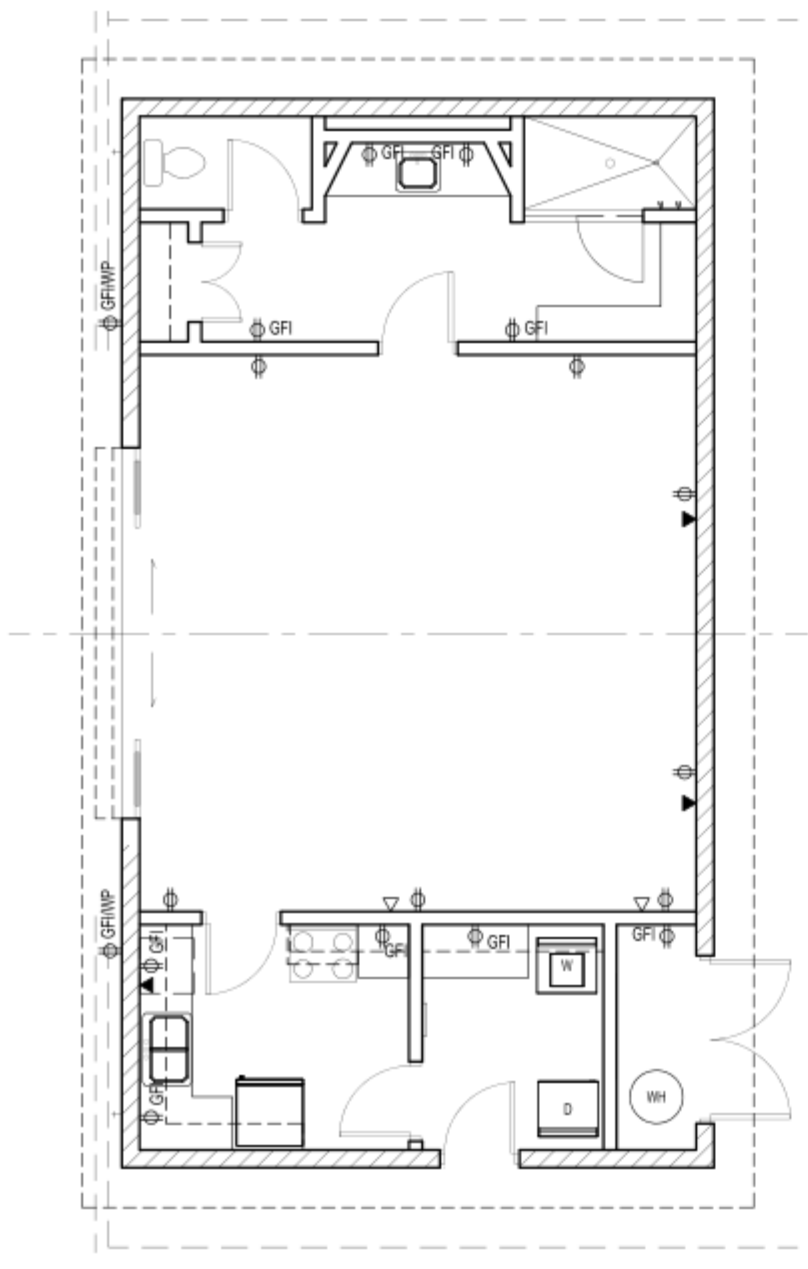

FINISH & POWER/COMMUNICATION PLAN

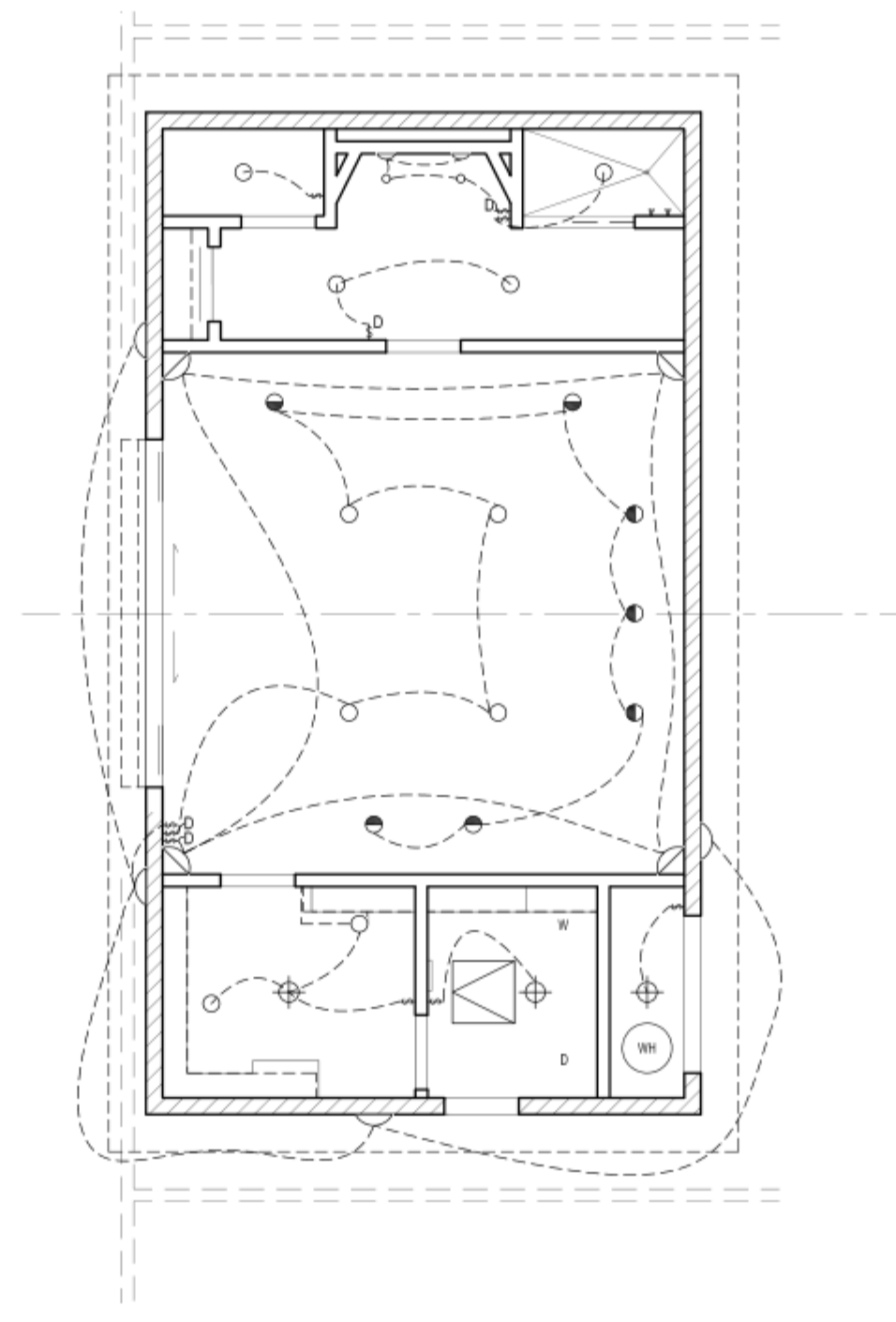

REFLECTED CEILING PLAN

KEY NOTES

SHEET NOTES

Little St. James Island
St. Thomas, USVI

Flagpole Pool

Gensler
2500 Broadway
Suite 300
Santa Monica **CA 90404**
Telephone 310.449.5600
Facsimile 310.449.5852

Issue	Date & Issue Description	By	Check
	4/4/11 DESIGN DEVELOPMENT		

Seal/Signature

Project Name
Little St. James Island – Flagpole Pool

Project Number
05.7112.008

CAD File Name

Description

Scale

A04.02

©2004 Gensler

EFTA01069639

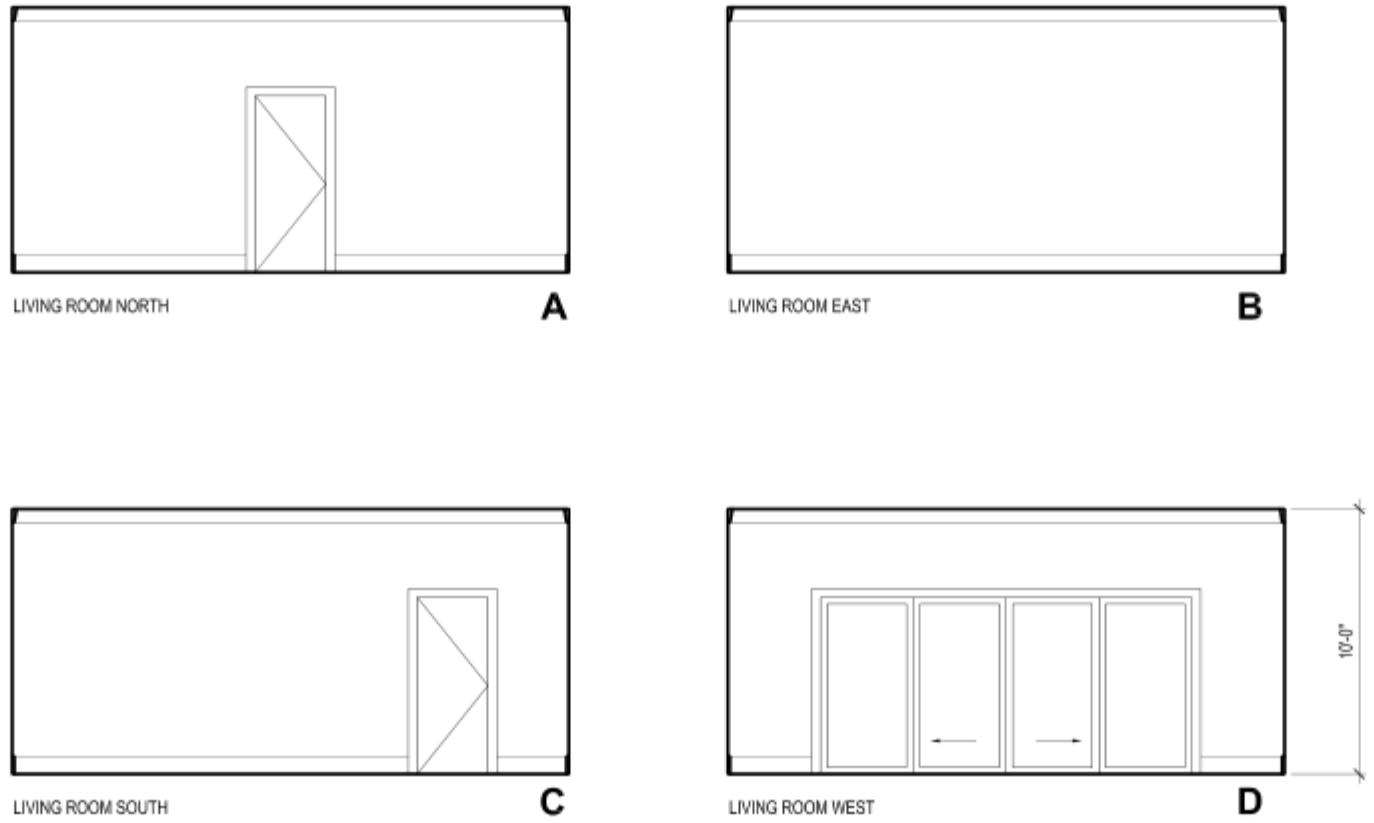

INTERIOR ELEVATION LIVING ROOM 1

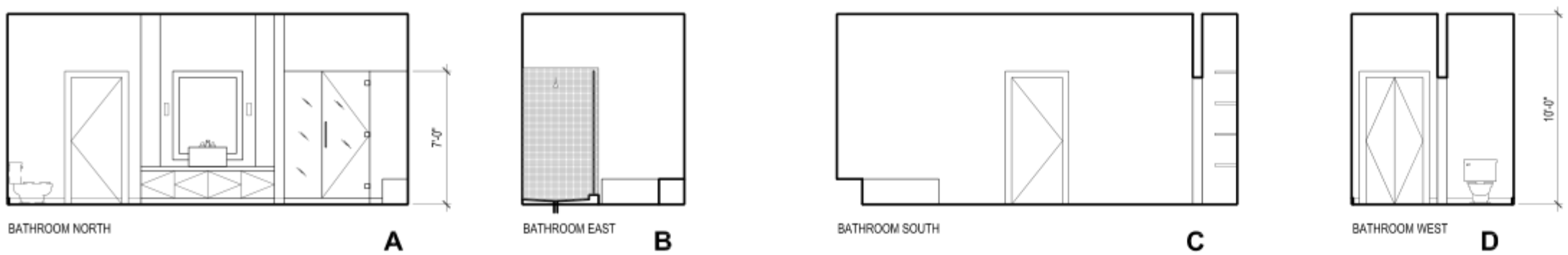

INTERIOR ELEVATIONS BATHROOM 2

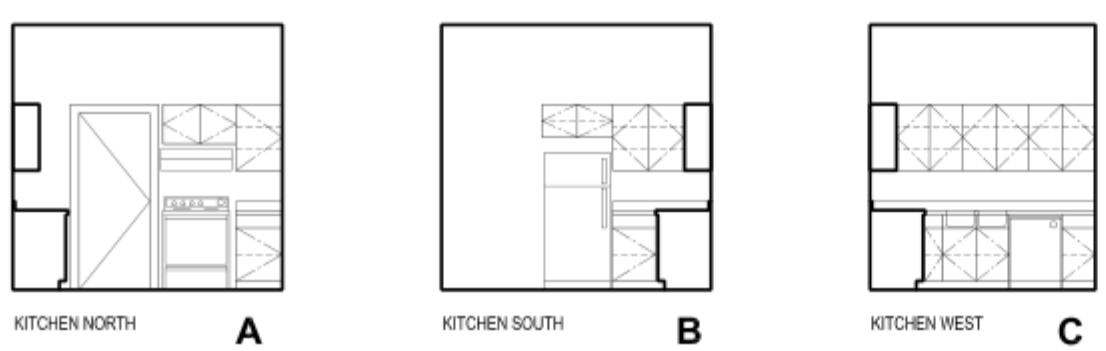

INTERIOR ELEVATIONS KITCHEN

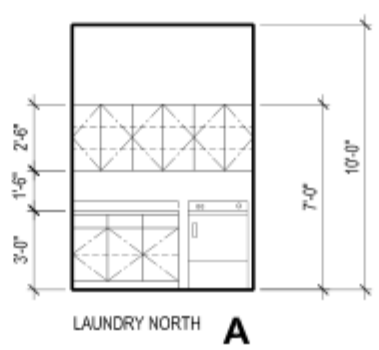

LAUNDRY ELEVATION 3

KEY NOTES

SHEET NOTES

Little St. James Island
St. Thomas, USVI

Flagpole Pool

Gensler
2500 Broadway
Suite 300
Santa Monica **CA 90404**
Telephone 310.449.5600
Facsimile 310.449.5852

Issue	Date & Issue Description	By	Check
	4/4/11 DESIGN DEVELOPMENT		

Seal/Signature

Project Name
Little St. James Island – Flagpole Pool

Project Number
05.7112.008

CAD File Name

Description

Scale

A05.01

© 2004 Gensler

EFTA01069640

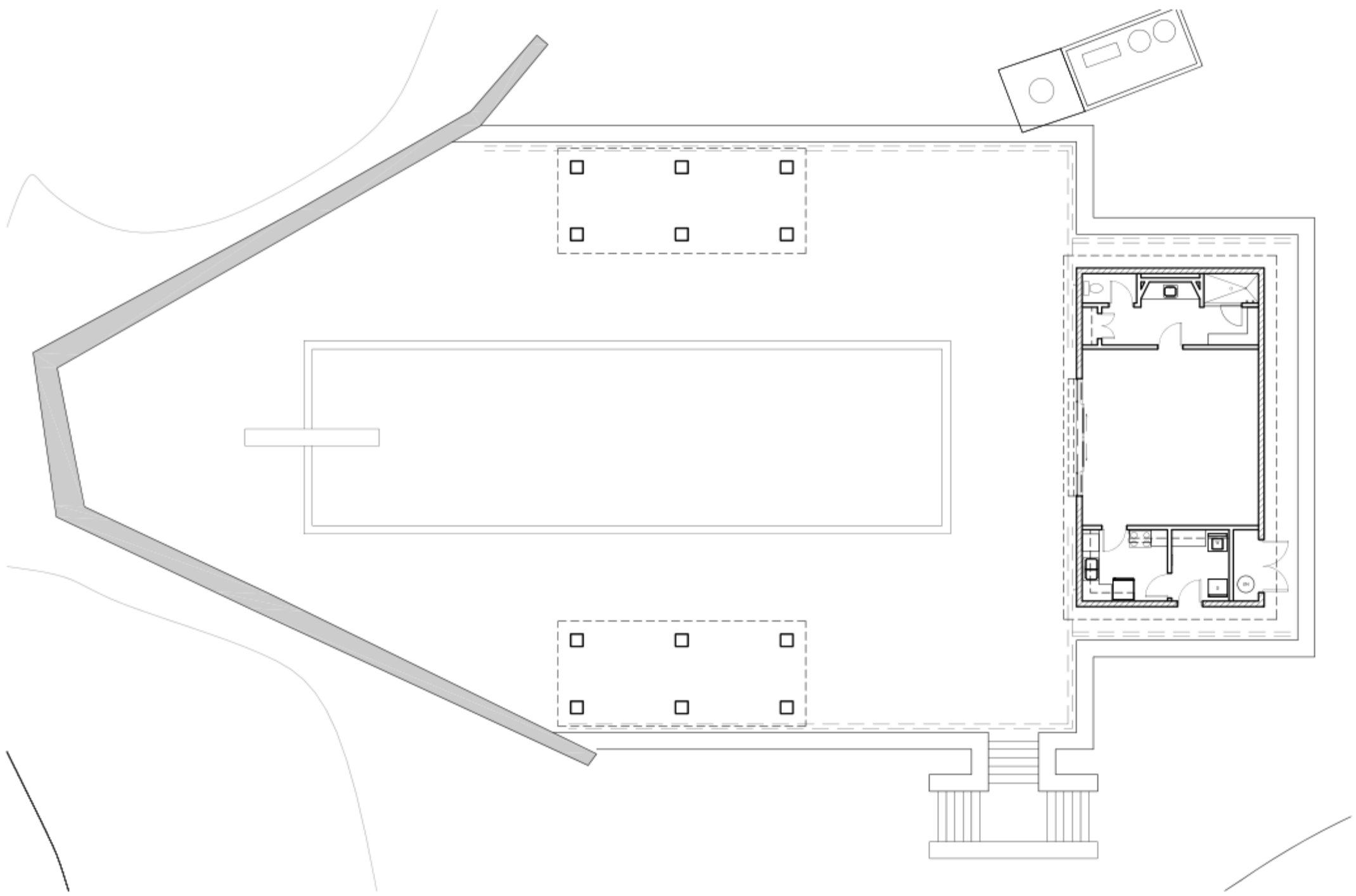

A. FINISH & HARDSCAPE PLAN - POOL HOUSE

SCALE: 1/8" = 1'-0"

KEY NOTES

SHEET NOTES

Little St. James Island
St. Thomas, USVI

Flagpole Pool

Gensler
2500 Broadway
Suite 300
Santa Monica **CA 90404**
Telephone 310.449.5600
Facsimile 310.449.5852

Issue	Date & Issue Description	By	Check
	4/4/11 DESIGN DEVELOPMENT		

Seal/Signature

Project Name
Little St. James Island – Flagpole Pool

Project Number
05.7112.008

CAD File Name

Description

Scale

A06.01

© 2004 Gensler

EFTA01069641

B. HARDSCAPE PLAN - POOL HOUSE

SCALE: 1/8" = 1'-0"

KEY NOTES

SHEET NOTES

Little St. James Island
St. Thomas, USVI

Flagpole Pool

Gensler

2500 Broadway
Suite 300
Santa Monica **CA 90404**
Telephone 310.449.5600
Facsimile 310.449.5852

Issue	Date & Issue Description	By	Check
	4/4/11 DESIGN DEVELOPMENT		

Seal/Signature

Project Name
Little St. James Island – Flagpole Pool

Project Number
05.7112.008

CAD File Name

Description

Scale

A06.02

© 2004 Gensler

EFTA01069642