NOTE – SCOTCHGUARD ALL FABRIC

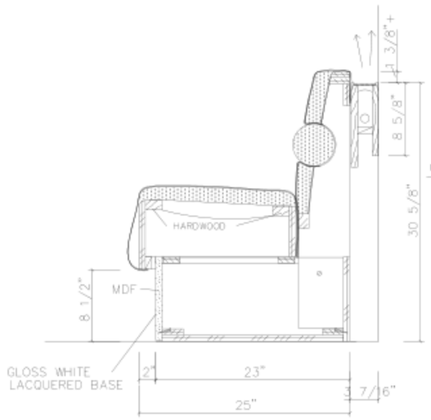

SECTION SHOWING LIGHT BOX
SCALE: 1 1/2" = 1' 0"

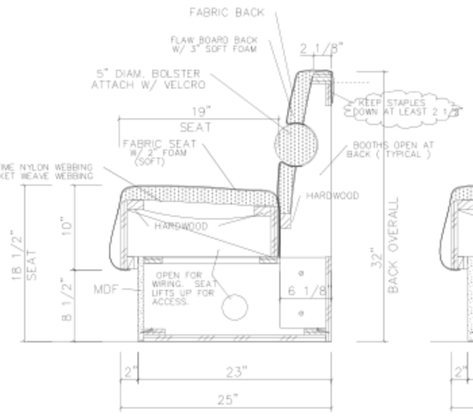

A SECTION
SCALE: 1 1/2" = 1' 0"

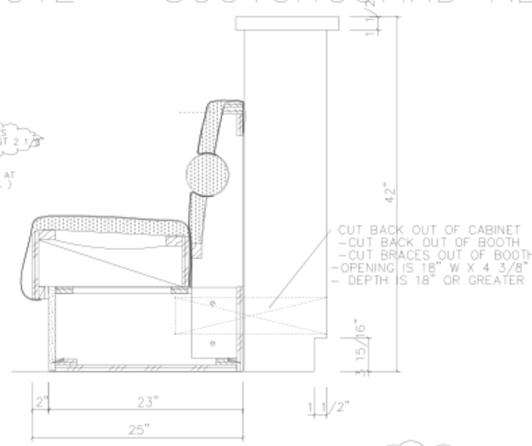

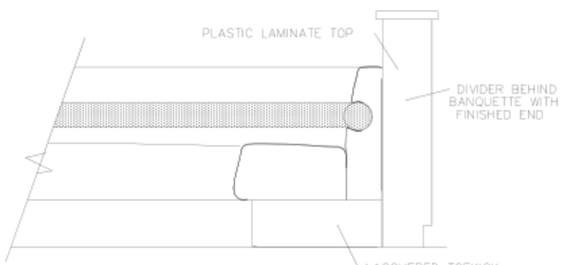

3 ELEVATION
SCALE: 1" = 1' 0"

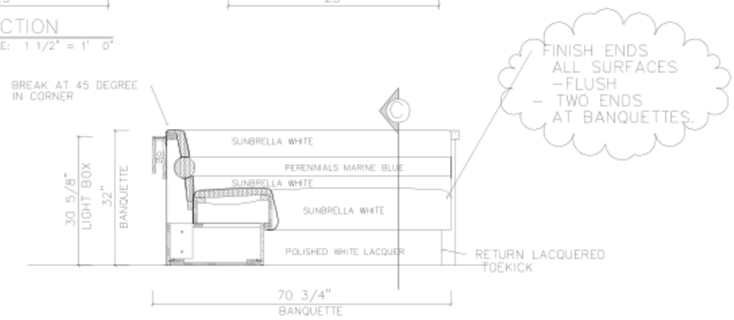

2 ELEVATION
SCALE: 3/4" = 1' 0"

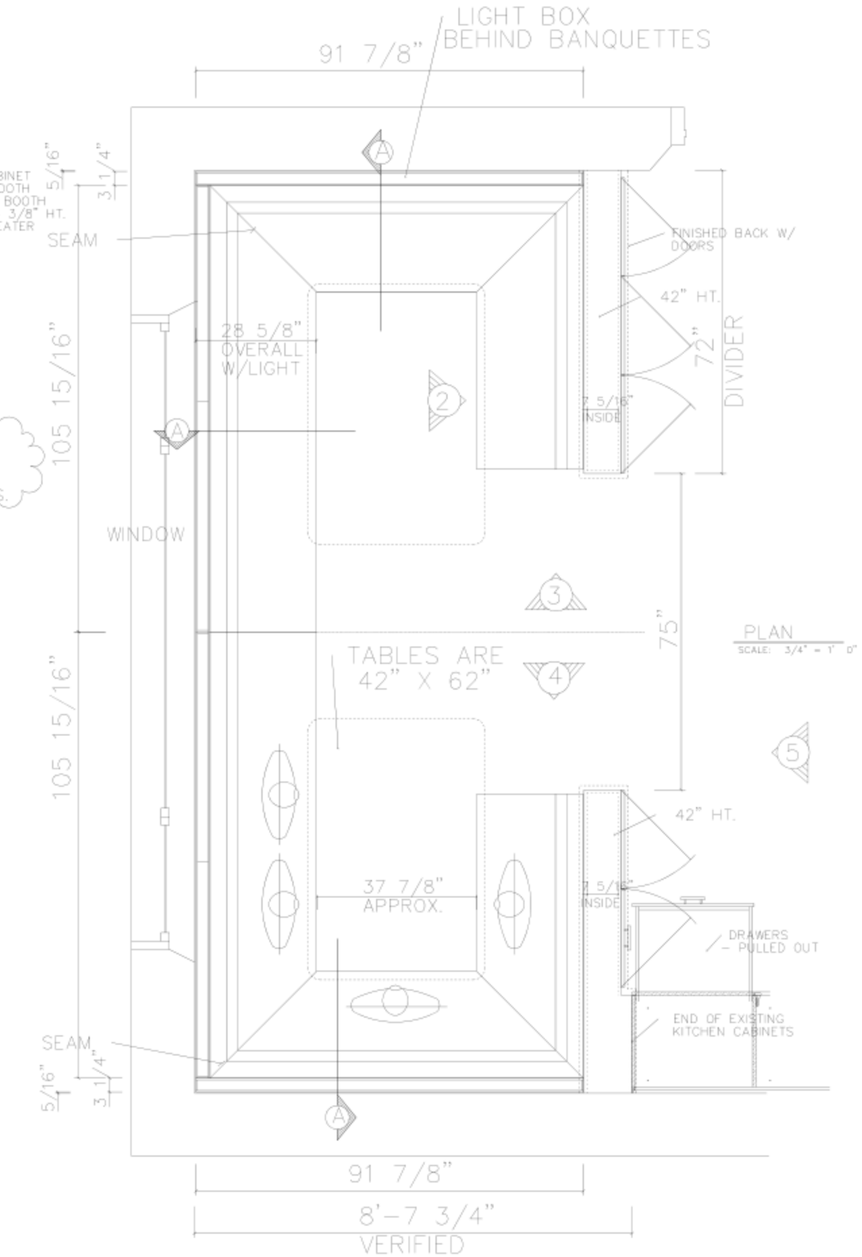

PLAN
SCALE: 3/4" = 1' 0"

MATERIAL : PLYWOOD/ HARDWOOD / MDF

FINISH : FABRIC FOR BACK AND SEAT TO BE PERENNIALS –ROUGH N ROWDY, 955–28, BLANCA. (7 yards)
FABRIC FOR BOLSTER TO BE SUNBELLA MARINE FABRIC, MARINE BLUE. (20 yards)

PLAST. LAM.: FORMICA DOVER WHITE 7197–58 MATTE

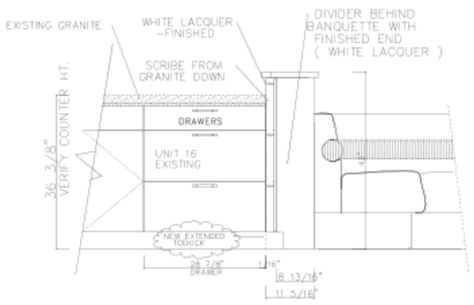

4 ELEVATION
SCALE: 3/4" = 1' 0"

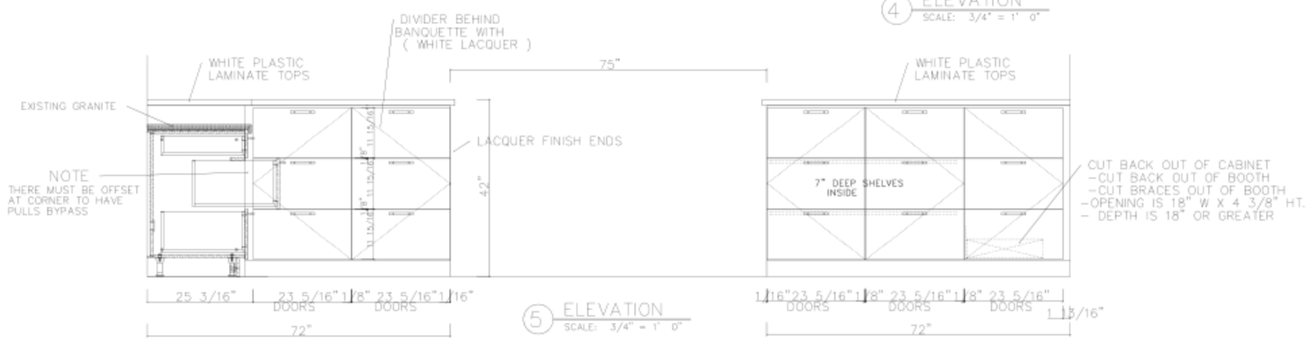

5 ELEVATION
SCALE: 3/4" = 1' 0"

SCALE:		PROJECT: LITTLE ST. JAMES	REVISED:	DATE:
AS NOTED	TOM HOOH INTERIOR DESIGNS, INC. 405–524–0508 Interior Architecture, Space Planning, Interior Design, FF&E Procurement and Architectural Woodwork	SHEET TITLE: BANQUETTE DETAILS SHEET 1 OF 5		1/19/11
DRAWN BY: KAS				SHEET #: B–1