Written dimensions have precedence over scaled dimensions. Contractor shall verify and be responsible for all dimensions and conditions on the project. Paul Ferreras, PE must be notified immediately in writing of any variation from the dimensions and conditions shown on the plans. Field verify all conditions prior to laying out or fabricating work. Bring to the Engineer's attention any deviation from designed conditions and field conditions prior to proceeding with any work and cooperate with Engineer to modify such conditions at no additional cost to the owner. Engineer or consultants. Shop drawings must be submitted to the Engineer and reviewed by the Engineer prior to ordering materials, fabrication and delivery to the site, unless otherwise provided for under the specific contractural agreement between the Engineer and Client. Paul Ferreras, PE expressly reserves its common law copyright and other property rights in these documents. These documents are not to be reproduced, changed or copied in any form or manner whatsoever nor are they to be assigned to a third party without first obtaining the written permission and/or written consent of Paul Ferreras, PE, in the event of unauthorized use of these documents by a third party, the third party shall hold Paul Ferreras, PE harmless and agrees to remunerate Paul Ferreras, PE for such use in an amount equal to the original fee to the original documents, plus legal fees, court costs, collection fees and other costs.

Typ.Roof System:
24ga corrugated metal sheathing over
2x4purlins @24"- 2x6 ea.end,
15lb felt
3/4"plywood over 3x6 rafters @24"

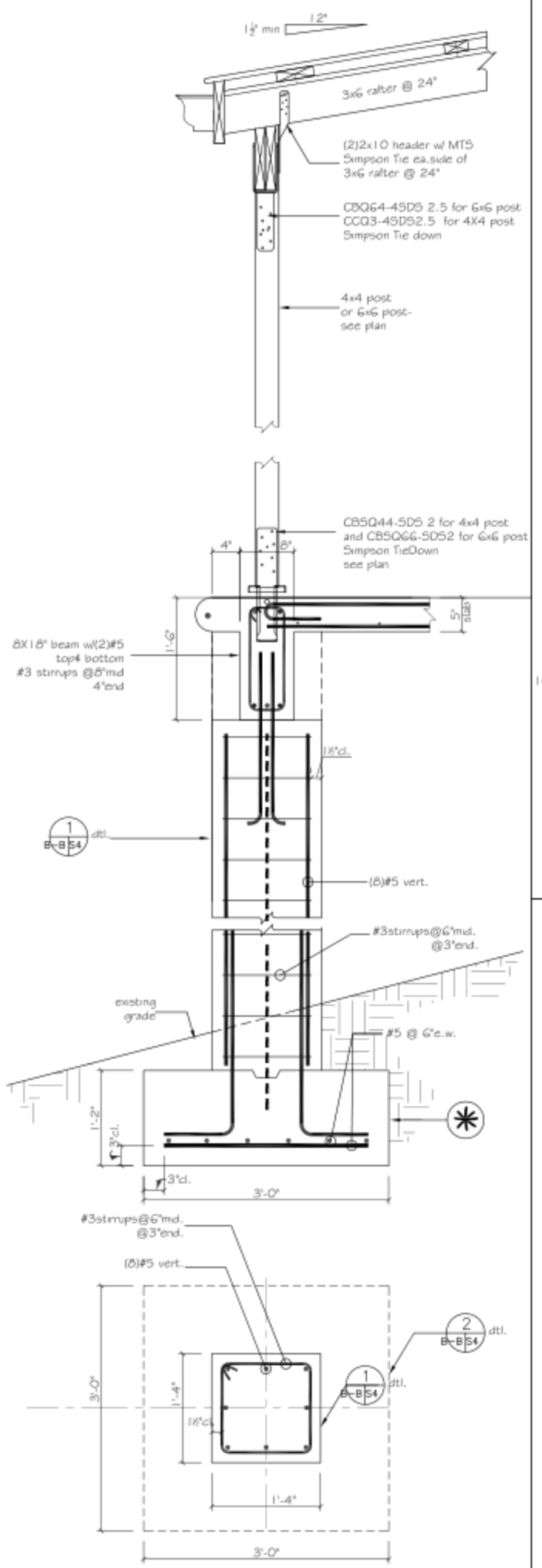

B-B S4 DECK FOUNDATION & ROOF EAVE scale: 1"=1'-0"

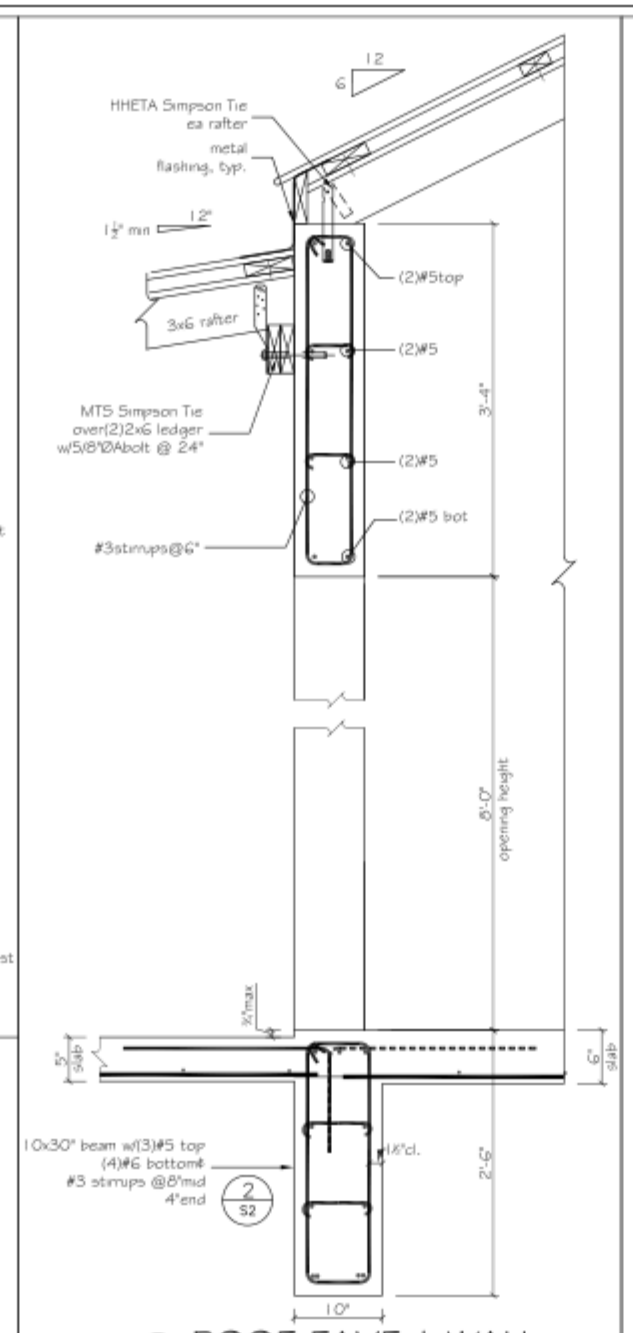

C-C S4 ROOF EAVE & WALL FRAMING scale: 1"=1'-0"

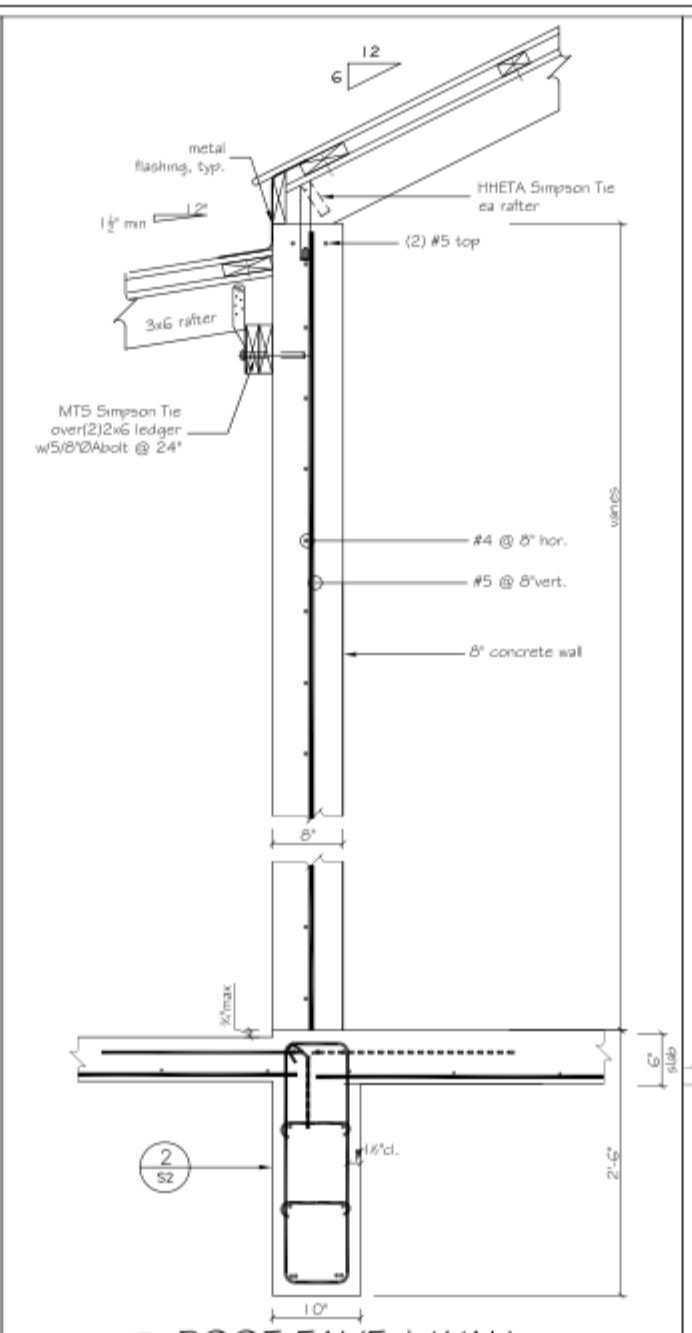

D-D S4 ROOF EAVE & WALL FRAMING scale: 1"=1'-0"

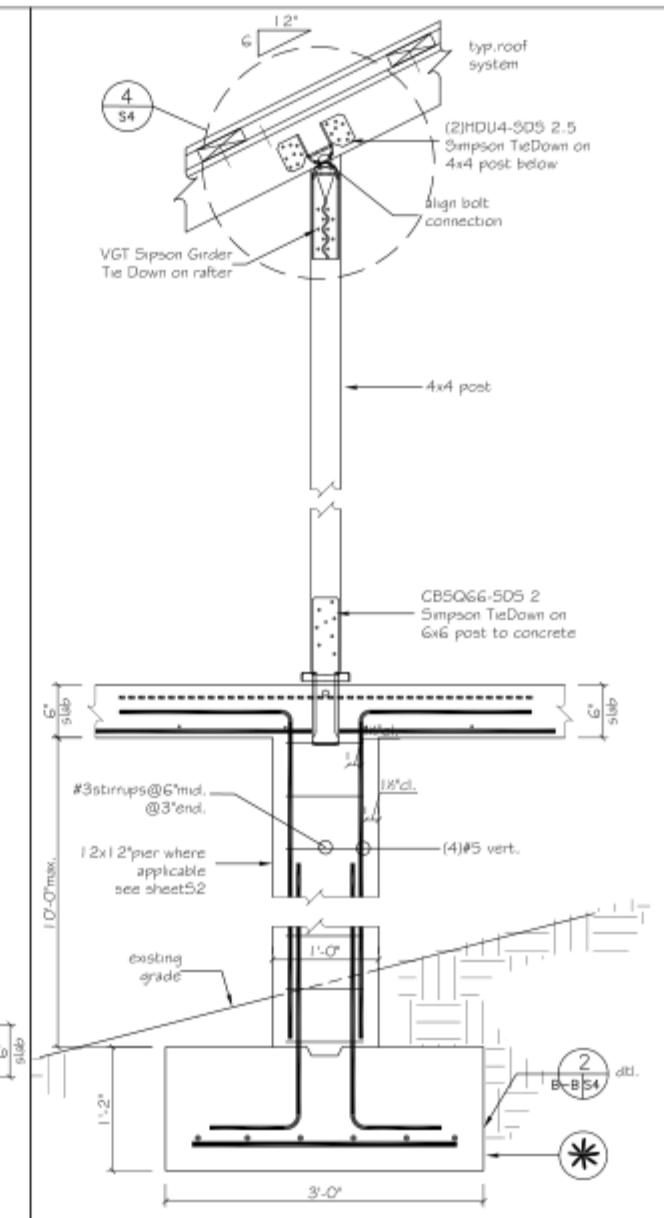

E-E S4 TYP. ROOF-POST CONNECTION scale: 1/4"=1'-0"

✱ footing on firm undisturbed soil min.2 T.S.F. bearing capacity. V.I.F.

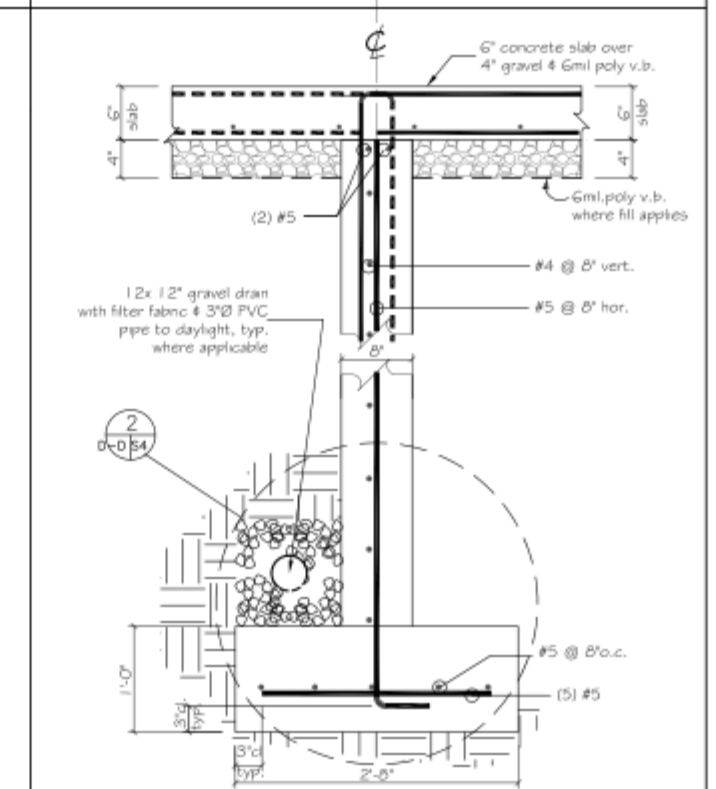

footing on firm undisturbed soil min.2 T.S.F. bearing capacity. V.I.F.

F-F S4 28x12"FOUNDATION SECTION scale: 1"=1'-0"

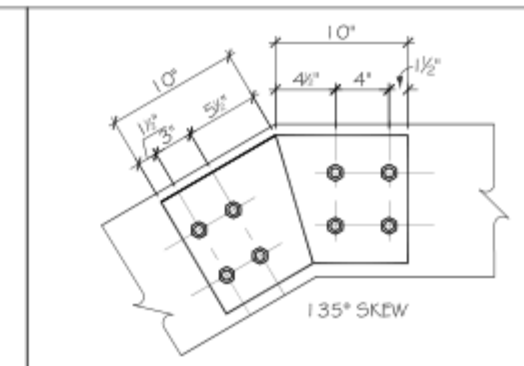

a S4 steel plate elevation scale: 1½"= 1'-0"

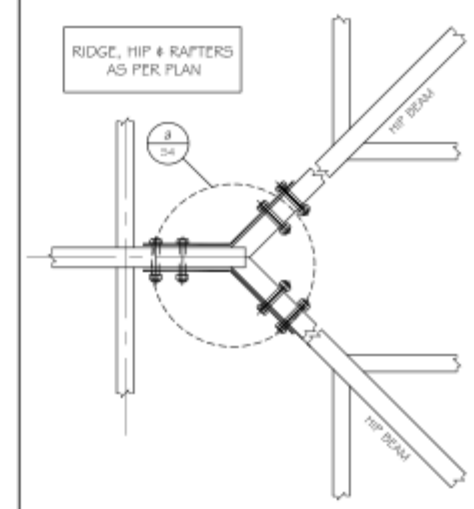

3 S3 HIP - RIDGE CONNECTION scale: 1"= 1'-0"

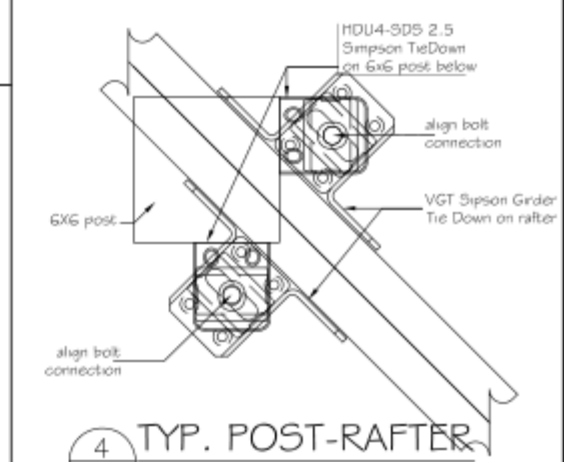

4 S4 TYP. POST-RAFTER CONNECTION scale: 3"= 1'-0"

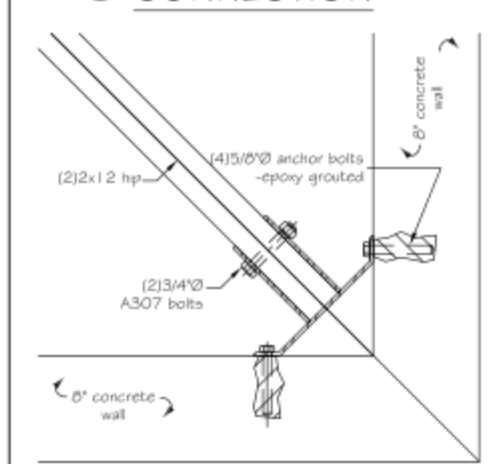

5 S4 TYP. HIP-WALL CONNECTION scale: 1 1/2"=1'-0"

PROPERTY

BUILDING ADDITION
GUEST COTTAGE

LITTLE ST.JAMES Ind.
RED HOOK QUARTER

ST.THOMAS-U.S.VIRGIN ISLANDS

STRUCTURAL DETAILS

REVISIONS

No	DESCRIPTION	DATE

PAUL FERRERAS, PE
STRUCTURAL ENGINEER
P.O.Box 600122
St.Thomas, USVI 00801
Phone (340) 714-5435
Fax (340) 777-5779
e-mail:paul@pfpe.pro

NEW YORK LICENSE No 059450
NEW JERSEY LICENSE GE 32649
FLORIDA LICENSE No 56408
VIRGIN ISLANDS LICENSE No 481E

ALL INFORMATION CONTAINED HEREIN IS THE PROPERTY OF PAUL FERRERAS.
THE CONCEPTS, IDEAS, DESIGNS AND DETAILS AS SHOWN ON THE DOCUMETS WERE CREATED , DEVELOPED AND PRESENTED FOR USE ON THE SPECIFIC PROJECT AND SHALL NOT BE REUSED FOR ANY PURPOSE WITHOUT EXPRESS WRITTEN CONSENT OF PAUL FERRERAS.
THE OWNER SHALL BE PERMITTED TO RETAIN COPIES FOR REFERENCE PURPOSE ONLY.

DATE: Nov.10th, 2011
SCALE: As Noted
S4
9 OF 10

EFTA01110102