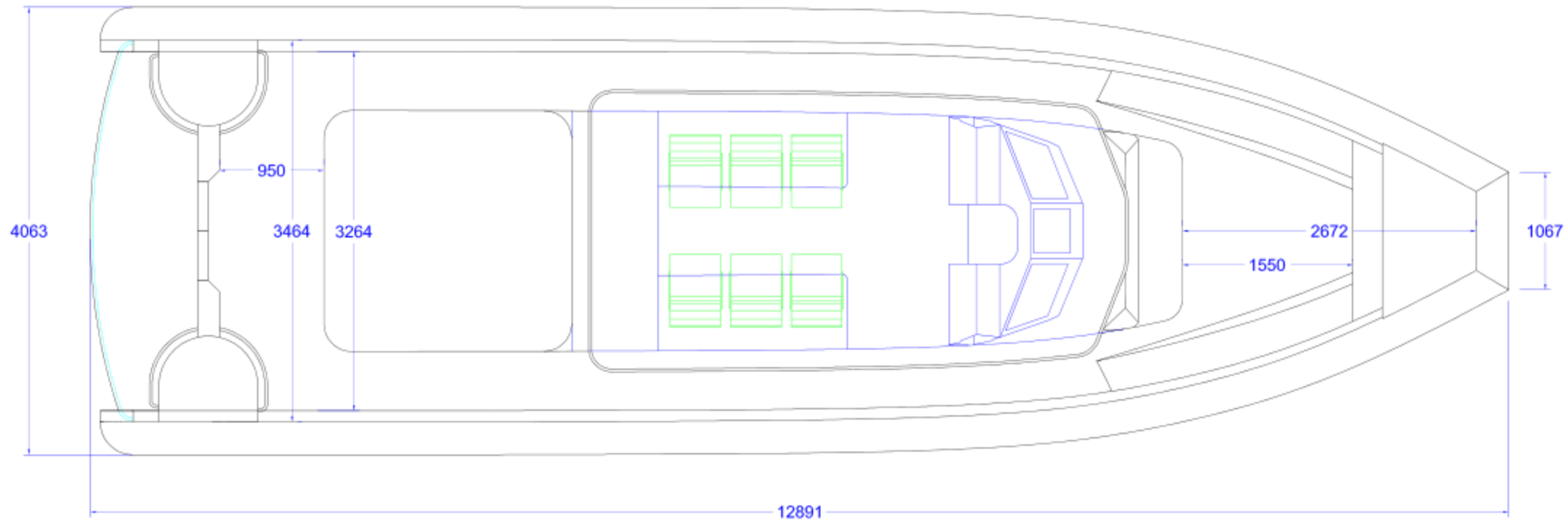

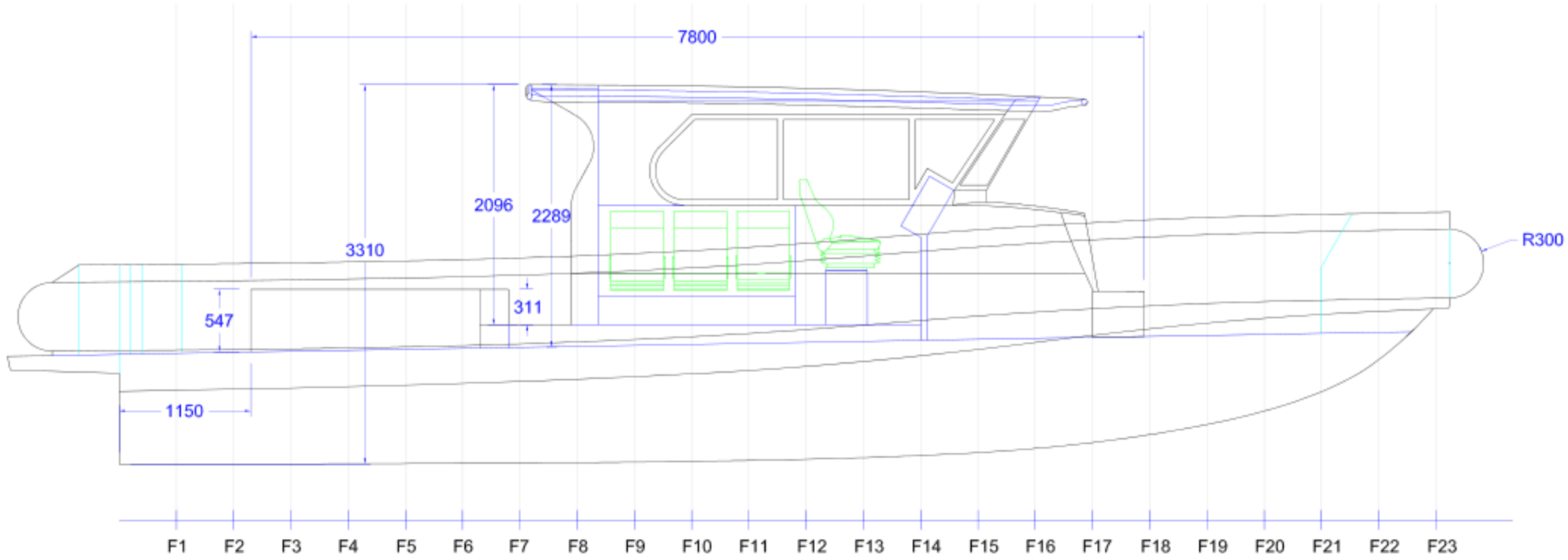

NAIAD DESIGN LTD
101 Wellington Street
P.O. Box 252
Picton, New Zealand

Phone: [redacted]
Fax [redacted]
E-MAIL: [redacted]

REVISION	DATE	DESCRIPTION

COPYRIGHT © NAIAD DESIGN LTD 2008

DESIGNER : SS,MH,JM
DRAWN BY: JM
CHECKED :
APPROVED:

PROJECT: 12.8m RIB
CLIENT:
DRAWING NO.: 1

TITLE: **GENERAL ARRANGEMENT**

DATE: 19 - 01 - 2008 | SCALE 1:50 | ISSUE A

EFTA01113369